linear dimension(Tolerances Standard GB/T 14486-2008)								—	⏥	⊥
variable range	to 6	over 6 to 10	over 10 to 30	over 30 to 60	over 60 to 100	over 100 to 160	over 160 to	to 10	over 10 to 100	over 100 to
tolerance	±0.20	±0.30	±0.50	±0.70	±1.00	±1.30	±1.60	0.10	0.30	0.60

REVISION RECORD

REV.	DESCRIPTION	ECN NO.	APPROVE	DATE
A	新发行		YXW	2015.5.15

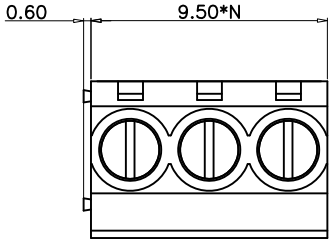

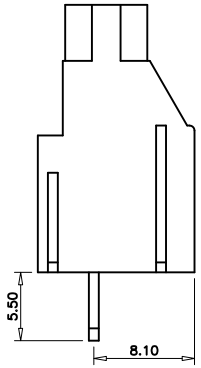

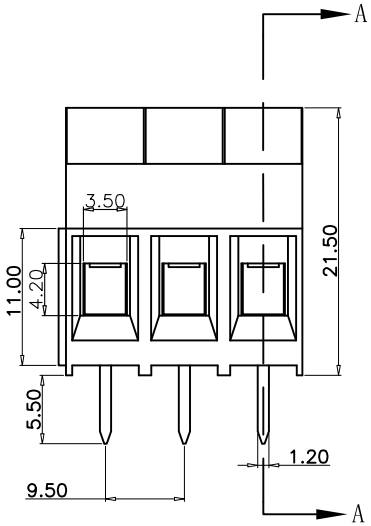

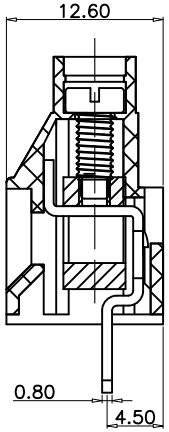

SECTION A–A

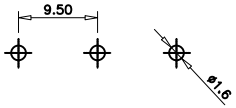

P.C.B LAYOUT

UL/CUL 技术参数
UL/CUL Techical Data

等 级 Use Group	B	C	D
额定电压 Rated Voltage (V)	300	-	300
额定电流Rated Current(A)	30	-	10
接线范围 Wire Range 单/多芯线 Solid/Stranded(AWG)	22-10		
耐电压withstanding VOLTAGE	1600V/Min		

IEC 技术参数
IEC Techical Data

过电压类别 Overvoltage Category	III	III	II
污染等级 Contamination Class	3	2	2
额定电压 Rated Voltage (V)	450	630	1000
额定电流Rated Current(A)	32	32	32
额定冲击电压 Impulse Withstand voltagea(KV)	6.0	6.0	6.0
导线截面积Conductor cross section 硬质/柔性导线 Solid/flexible(mm²)	4.0		

材 料 Material	
绝缘材料 Lnsulation Material	PA66
阻燃等级 Lmflammability	UL94V-0
导体材料 Contactor Material	铜合金 Copper alloy
导体表面镀层 Contactive Coating	镀锡 Tin plated
一般参数 Other Data	
间 距 Pitch (mm)	9.50
极 数 Poles (P)	2-24
剥线长度 Stripping Length(mm)	6-7
螺丝 Screw/扭矩 Torque(Max)(N.M)	M3/0.5
工作温度Operating temperatur(° C)	-40--+105
引针尺寸 Pin Dimensions(mm)	5.50
PCB板孔径 PCB Hole Diameter(mm)	1.6

DES.	CLB	DATE	2015.2.25	单位/UNITS	MM	时间/SIZE	A4	比例/SCALE	1:1
CHK.	LF	DATE	2015.2.25	宁波市旭骋电子有限公司 NINGBOSHI XUCHENG ELECTRONIC CO.,LTD					
APP.	YXW	DATE	2015.2.25						

第三视角/THIRDANGLEPROJECTION

版本/REV: A

名称/TITLE: XC950-9.50